Cambridge International Examinations
Cambridge International General Certificate of Secondary Education

CANDIDATE NAME	

CENTRE NUMBER						CANDIDATE NUMBER					

9332191914

PHYSICS **0625/41**

Paper 4 Theory (Extended) **May/June 2016**

1 hour 15 minutes

Candidates answer on the Question Paper.

No Additional Materials are required.

READ THESE INSTRUCTIONS FIRST

Write your Centre number, candidate number and name on all the work you hand in.
Write in dark blue or black pen.
You may use an HB pencil for any diagrams or graphs.
Do not use staples, paper clips, glue or correction fluid.
DO **NOT** WRITE IN ANY BARCODES.

Answer **all** questions.
Electronic calculators may be used.
You may lose marks if you do not show your working or if you do not use appropriate units.
Take the weight of 1.0 kg to be 10 N (acceleration of free fall = 10 m / s^2).

At the end of the examination, fasten all your work securely together.
The number of marks is given in brackets [ ] at the end of each question or part question.

The syllabus is approved for use in England, Wales and Northern Ireland as a Cambridge International Level 1/Level 2 Certificate.

This document consists of **20** printed pages.

CAMBRIDGE
International Examinations

06_0625_41_2016_1.10
© UCLES 2016
www.root19.com
+91 - 9969 353 391

1 **(a)** A bus travels at a constant speed. It stops for a short time and then travels at a higher constant speed.

Using the axes in Fig. 1.1, draw a distance-time graph for this bus journey.

Fig. 1.1

[3]

(b) A lift (elevator) starts from rest at the ground floor of a building.

Fig. 1.2 is the speed-time graph for the motion of the lift to the top floor of the building.

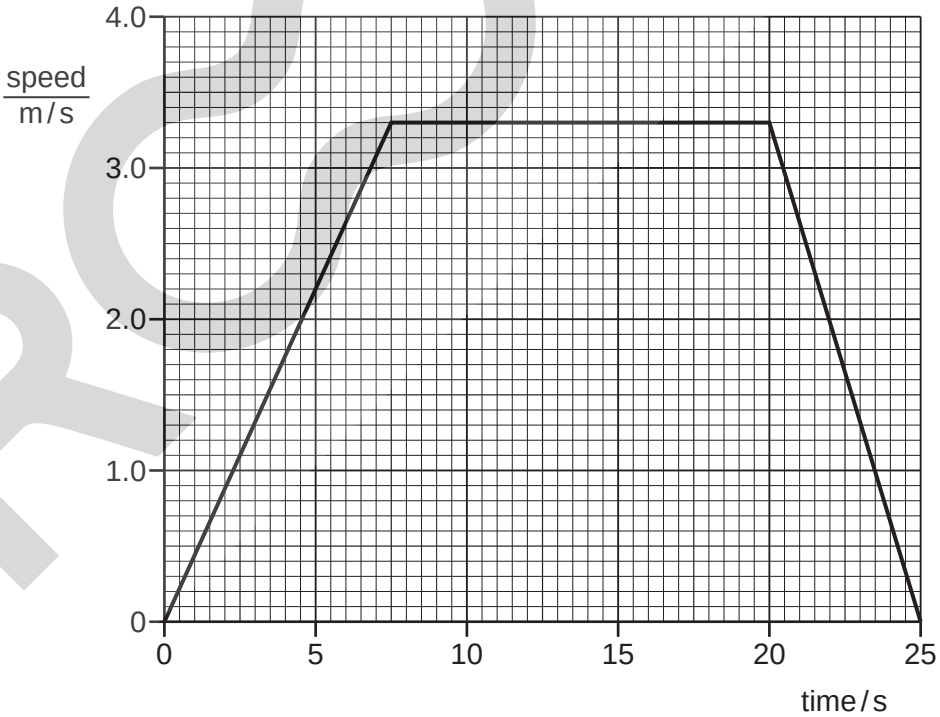

Fig. 1.2

© UCLES 2016

www.root19.com
+91 - 9969 353 391

Use the graph to determine the distance from the ground floor to the top floor of the building.

distance = ... [4]

[Total: 7]

© UCLES 2016

www.root19.com
+91 - 9969 353 391

2 Fig. 2.1 shows a dummy of mass 70 kg used in a crash test to investigate the safety of a new car.

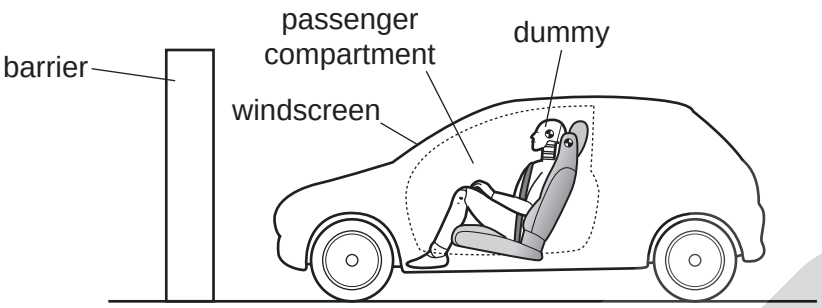

Fig. 2.1

The car approaches a solid barrier at 20 m / s. It crashes into the barrier and stops suddenly.

(a) **(i)** Calculate the momentum of the dummy immediately before the crash.

momentum = ... [2]

(ii) Determine the impulse that must be applied to the dummy to bring it to rest.

impulse = ... [1]

© UCLES 2016

www.root19.com
+91 - 9969 353 391

(b) In the crash test, the passenger compartment comes to rest in 0.20 s.

Calculate the deceleration of the passenger compartment.

deceleration = ... [2]

(c) The seat belt and air bag bring the dummy to rest so that it does not hit the windscreen. The dummy has an average deceleration of 80 m / s^2.

Calculate the average resultant force applied to the dummy, of mass 70 kg.

force = ... [2]

(d) The deceleration of the dummy is less than the deceleration of the passenger compartment.

Explain why this is of benefit for the safety of a passenger.

.....

.....

.....

.....

.....

..... [2]

[Total: 9]

© UCLES 2016

www.root19.com
+91 - 9969 353 391

3 Fig. 3.1 shows an oil tank that has a rectangular base of dimensions 2.4 m by 1.5 m.

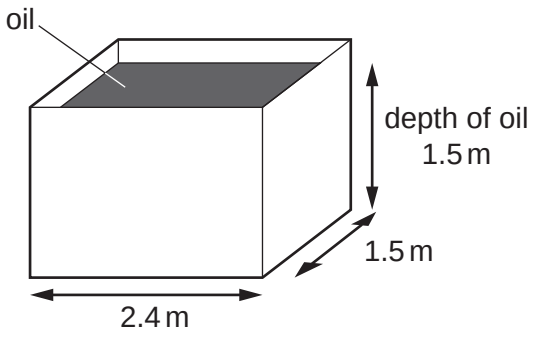

Fig. 3.1

The tank is filled with oil of density 850 kg / m^3 to a depth of 1.5 m.

(a) Calculate

(i) the pressure exerted by the oil on the base of the tank,

pressure = ... [2]

(ii) the force exerted by the oil on the base of the tank.

force = ... [2]

www.root19.com +91 - 9969 353 391

(b) The force calculated in **(a)(ii)** is the weight of the oil.

Calculate the mass of oil in the tank.

mass = ... [1]

(c) When he is checking the level of oil in the tank, a man drops a brass key into the oil and it sinks to the bottom of the oil.

(i) State what this shows about the density of brass.

..... [1]

(ii) Explain how attaching the key to a piece of wood could prevent the key from sinking.

.....

.....

..... [1]

[Total: 7]

© UCLES 2016

www.root19.com
+91 - 9969 353 391

4 **(a)** Explain, in terms of molecules, why it is possible to compress a gas, but not a liquid.

.....

.....

.....

..... [2]

(b) Two containers made of insulating material contain the same volume of water at room temperature. The containers do not have lids. The volume of liquid in each container gradually decreases.

(i) After a certain time, the temperature of the water has decreased to below room temperature.

Explain, in terms of molecules, why the temperature has decreased.

.....

.....

.....

..... [2]

(ii) One of the containers is wide and shallow. The other container is narrow and deep.

Predict which container has the greater rate of cooling. Explain your answer.

.....

.....

..... [2]

[Total: 6]

© UCLES 2016

www.root19.com
+91 - 9969 353 391

5 **(a)** State what happens to the molecules of a gas in a sealed container when the temperature of the gas is increased.

..... [1]

(b) A quantity of gas is contained in a sealed container of fixed volume. The temperature of the gas is increased.

State, in terms of molecules, **two** reasons why the pressure of the gas increases.

1. .....

2. .....

[2]

(c) A helium-filled weather balloon is held at ground level. The volume of the balloon is 4800 m^3. The pressure of the helium is 98 kPa.

The balloon is released and rises to a height where the volume of the balloon is 7200 m^3.

(i) Calculate the new pressure of the helium. Assume that the temperature stays constant.

pressure = ... [2]

(ii) Suggest why it may be necessary to release helium from the balloon as it rises even higher.

.....

..... [1]

[Total: 6]

© UCLES 2016

www.root19.com
+91 - 9969 353 391

6 **(a)** Two students are measuring the speed of sound.

The students are provided with a starting pistol, a stopwatch and a long measuring tape. The starting pistol, when fired, produces a loud sound and a puff of smoke at the same instant.

Describe how the students use the apparatus and how they calculate the speed. You may draw a diagram.

.....

.....

.....

.....

.....

.....

.....

.....

.....

..... [4]

© UCLES 2016

www.root19.com
+91 - 9969 353 391

(b) A device at the bottom of the sea emits a sound wave of frequency 200 Hz.

(i) The speed of sound in sea-water is 1500 m / s.

Calculate the wavelength of the sound in sea-water.

wavelength = ... [2]

(ii) The sound wave passes from the sea-water into the air.

State what happens, if anything, to

- the frequency of the sound, ...

.....

- the speed of the sound. .....

.....

[2]

[Total: 8]

© UCLES 2016

www.root19.com
+91 - 9969 353 391

7 **(a)** **(i)** A ray of light passes through a length of curved optical fibre.

Draw a diagram showing the fibre and the path of the ray of light.

[1]

(ii) Describe one use of optical fibres in medicine. You may draw a diagram.

.....

.....

.....

.....

.....

.....

..... [3]

© UCLES 2016

www.root19.com
+91 - 9969 353 391

(b) Draw a straight line from each wave on the left to the most appropriate speed.

	90 m / s (9×10)
light in air	6000 m / s (6×10^3)
	100 000 m / s (1×10^5)
microwaves in a vacuum	
	1 000 000 m / s (1×10^6)
sound in steel	300 000 000 m / s (3×10^8)
	60 000 000 000 m / s (6×10^{10})

[3]

(c) The refractive index of a block of glass is 1.5.

Use your value for the speed of light from **(b)** to calculate the speed of light in this block.

speed = ... [2]

[Total: 9]

© UCLES 2016

www.root19.com
+91 - 9969 353 391

8 **(a)** Two straight, vertical wires X and Y pass through holes in a horizontal card.

Fig. 8.1 shows the card viewed from above.

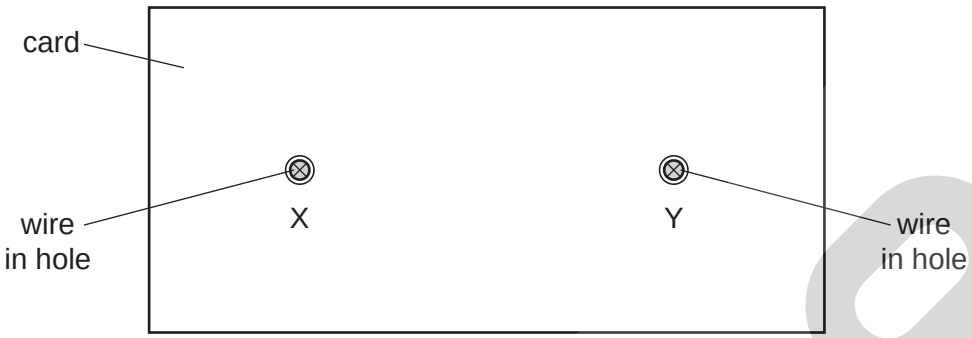

Fig. 8.1

There is a current in each wire in a downward direction (into the page).

(i) The magnetic field at Y due to the current in X produces a force on Y.

Place a tick in each blank column of the table to indicate the direction of this magnetic field and the direction of the force.

	magnetic field at Y	force on Y
towards the top of the page		
towards the bottom of the page		
to the left		
to the right		
into the page		
out of the page		

[2]

www.root19.com +91 - 9969 353 391

(ii) State and explain whether there is also a force on wire X.

.....

..... [1]

(b) Fig. 8.2 shows a d.c. supply connected to the input of a transformer.

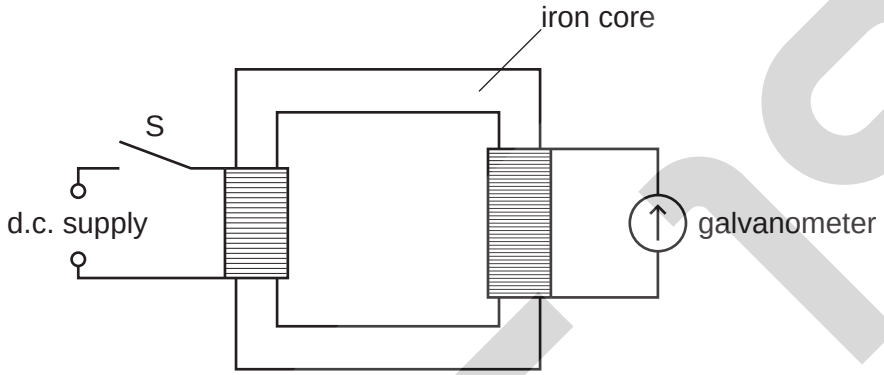

Fig. 8.2

When switch S is first closed, the needle of the galvanometer deflects briefly, then returns to zero.

Explain why the brief deflection occurs.

.....

.....

.....

.....

..... [3]

[Total: 6]

© UCLES 2016

www.root19.com
+91 - 9969 353 391

9 Fig. 9.1 shows a 12 V battery connected in a circuit containing resistors A, B, C and D. Each resistor has a resistance of 6.0 Ω.

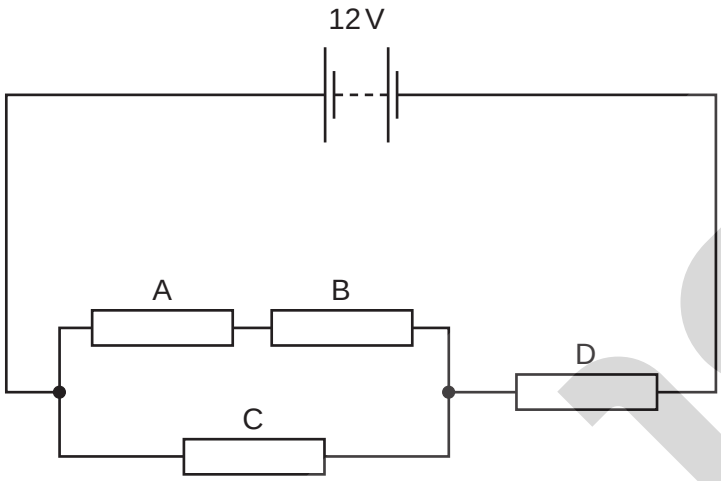

Fig. 9.1

(a) Calculate the combined resistance of

(i) resistors A and B,

resistance = ... [1]

(ii) resistors A, B and C,

resistance = ... [2]

(iii) resistors A, B, C and D.

resistance = ... [1]

© UCLES 2016

www.root19.com
+91 - 9969 353 391

(b) Calculate

(i) the current in the battery,

current = ... [1]

(ii) the energy transferred from the battery to the circuit in 50 s.

energy transferred = ... [2]

[Total: 7]

© UCLES 2016

www.root19.com
+91 - 9969 353 391

10 **(a)** **(i)** Fig. 10.1 shows the symbol for a circuit component.

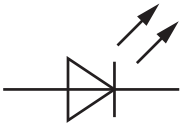

Fig. 10.1

Name this component.

..... [1]

(ii) In the space below, draw the symbol for a NOT gate.

[1]

(b) Fig. 10.2 shows a digital circuit.

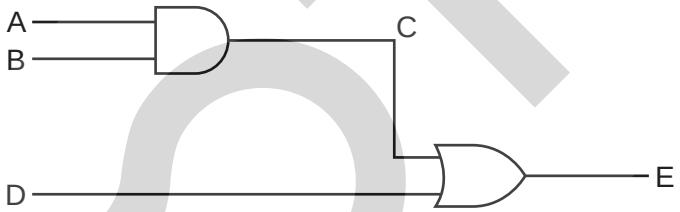

Fig. 10.2

Complete the truth table for this circuit.

input A	input B	output C	input D	output E
0	0		0	
0	0		1	
0	1		0	
0	1		1	
1	0		0	
1	0		1	
1	1		0	
1	1		1	

[3]

© UCLES 2016

www.root19.com
+91 - 9969 353 391

(c) Suggest a modification to the circuit in Fig. 10.2 to produce the output Z in the truth table below. It may help you to compare this truth table with the truth table in **(b)**.

input A	input B	input D	output Z
0	0	0	0
0	0	1	0
0	1	0	0
0	1	1	0
1	0	0	0
1	0	1	0
1	1	0	0
1	1	1	1

.....

..... [1]

[Total: 6]

© UCLES 2016

www.root19.com
+91 - 9969 353 391

11 Bismuth-214 is radioactive. It has a half-life of 20 minutes.

(a) The nuclide notation for bismuth-214 is $^{214}_{83}Bi$.

State the composition of the nucleus of bismuth-214.

.....

..... [2]

(b) Bismuth-214 decays by β-decay to an isotope of polonium, Po.

Complete the equation for the decay of bismuth-214.

$$^{214}_{83}Bi \rightarrow \; ^{\cdots}_{\cdots}\beta + \; ^{\cdots}_{\cdots}Po$$

[3]

(c) The count rate from a sample of bismuth-214 is 360 counts / s.

Predict the count rate from the sample after 60 minutes.

count rate = ... [2]

(d) State **two** of the social, economic or environmental issues involved in the storage of radioactive materials with very long half-lives.

.....

.....

.....

..... [2]

[Total: 9]

To avoid the issue of disclosure of answer-related information to candidates, all copyright acknowledgements are reproduced online in the Cambridge International Examinations Copyright Acknowledgements Booklet. This is produced for each series of examinations and is freely available to download at www.cie.org.uk after the live examination series.

© UCLES 2016

www.root19.com +91 - 9969 353 391